RECOMENDED SERVICE BULLETIN

NO. RSB 40-052

NO. RSB D4-069

NO. RSB F4-018

I TECHNICAL DETAILS

I.1 Category

Recomended.

I.2 Airplanes affected

Type:	DA 40 /D /F
Serial Numbers:	40.006 through 40.009, 40.011 through 40.084, 40.201 through 40.678, 40.680 through 40.687, 40.691 through 40.692, 40.695 through 40.698, 40.700, 40.DS001 through 40.DS019, 40.FC001 through 40.FC029, D4.001 through D4.418

I.3 Time of Compliance

At holders discretion.

I.4 Date of Effectivity

27-Nov-2009.

I.5 Subject

Seal between the firewall shield and the fuselage.

ATA-Code: 53-10

I.6 Reason

A new seal cover has been approved, which improves the seal of the bond between the firewall shield and the fuselage. The formation of white dust at the bottom edge of the firewall due to moisture in the firewall is prevented.

I.7 Concurrent Documents

None.

I.8 Approval

The technical information or instructions contained in this document relate to the Design Change Advisory No. MÄM 40-381, which has been approved under the authority of EASA Design Organization Approval No. EASA.21J.052.

The technical content of this document has been approved under the authority of DOA No. EASA.21J.052.

I.9 Accomplishment/Instructions

WI-RSB 40-052 / WI-RSB D4-069 / WI-RSB F4-018, latest effective issue, must be complied with.

I.10 Mass (Weight) and CG

Negligible.

II PLANNING INFORMATION

II.1 Material & Availability

WI-RSB 40-052 / WI-RSB D4-069 / WI-RSB F4-018 and required parts are available through DAI.

II.2 Special Tools

None.

II.3 Labor effort

1 hour (does not include cure times of products used).

II.4 Credit

None.

II.5 Reference Documents

DA 40 Series Airplane Maintenance Manual, Doc. No. 6.02.01, latest effective issue.

WI-RSB 40-052 / WI-RSB D4-069 / WI-RSB F4-018, latest effective issue.

III REMARKS

1. All measures must be carried out by a certified aircraft service station or a certified aircraft maintenance mechanic.
2. All works, particular those that are not especially described in this Service Bulletin, must be carried out in accordance with the referenced maintenance manual.
3. Accomplishment of the measures must be confirmed in the log book.
4. In case of doubt, contact Diamond Aircraft.

EXECUTION REPORT TO SERVICE BULLETIN RSB 40-052 RSB D4-069 RSB F4-018

AIRPLANE DATA

Airplane Serial Number: _____

Airplane Registration: _____

Airplane Operator: _____

Hours of operation of airplane: _____

No. of landings: _____

Hours of operation-engine _____

Typical operation of airplane: private, club, training, other _____

_____

Date, Name, Sign

Please fax the completed form to Fax No. +43-2622-26700-1369 or e-mail to airworthiness@diamond-air.at

WORK INSTRUCTION

WI-RSB 40-052

WI-RSB D4-069

WI-RSB F4-018

"INSTALLATION OF FIREWALL EDGE GUARDS"

I GENERAL INFORMATION

I.1 Subject:

Improvement of the seal between the firewall shield and the fuselage to prevent moisture ingress.

I.2 Reference Documents:

Diamond Aircraft DA 40 Series Airplane Maintenance Manual, Doc. No. 6.02.01, latest effective issue.

I.3 Remarks:

a) The work must be carried out by a certified aircraft service station or a certified aircraft maintenance mechanic.

b) All work (particularly that which is not specifically described in this work instruction) must be carried out in accordance with the referenced maintenance manual.

c) In case of doubt, contact Diamond Aircraft Industries.

II DRAWINGS, SPECIAL TOOLS & MATERIALS

II.1 Drawings:

DA4-5310-10-00

II.2 Special Tools:

None.

II.3 Materials:

Qty	Description	Part Number
1	Seal Cover	DA4-5310-11-00
a/r	Sealant	Terostat-9100 1K-PUR
a/r	Fire retardant paint	Acc. to AMM
a/r	Finishing varnish	Acc. to AMM

III INSTRUCTIONS

Installation

1	Remove upper and lower cowlings acc. to AMM Section 71.
2	Check that the new seal cover fits proper to the fuselage as shown on drawing DA4-5310-10-00.
3	If it is necessary to trim the seal cover to fit tight to the fuselage, cut small slots into the flange of the seal cover.
4	Mark the outline of the seal cover with masking tape.

5	Grind off fire-paint from the exterior of the fuselage within the outline of the seal cover.
6	Clean surface from dirt and grease. Surface should be solvent wiped and then wiped dry. Refer to AMM Section 51-30.
7	Install seal cover with Terostat 1K-PUR sealant.
8	Hold seal cover in place with masking tape during cure.
9	Cure i.a.w. the instructions listed on the Terostat 1K-PUR sealant.
10	After cure, remove the masking tape and excess sealant around the edges.

11	Coat sealant joint and seal cover with fire resistant paint, in acc. with drawing DA4-5310-10-00 and AMM Section 51-30. NOTE: Apply fire protective paint with 5 mm (0.2 in) excess.
12	Clean working area and check for foreign objects.
13	Install upper and lower cowlings acc. to AMM Section 71.
14	Test all systems in working area for function.
15	Make necessary entries into aircraft logs.

Confidential

REVISION					
REV	SH	ZONE	DESCRIPTION	DATE	APPROVAL
-	01	ALL	MÄM 40-381 NEW DRAWING, DOES NOT SUPERSEDE ANOTHER DRAWING.	20.04.09	SEE TB

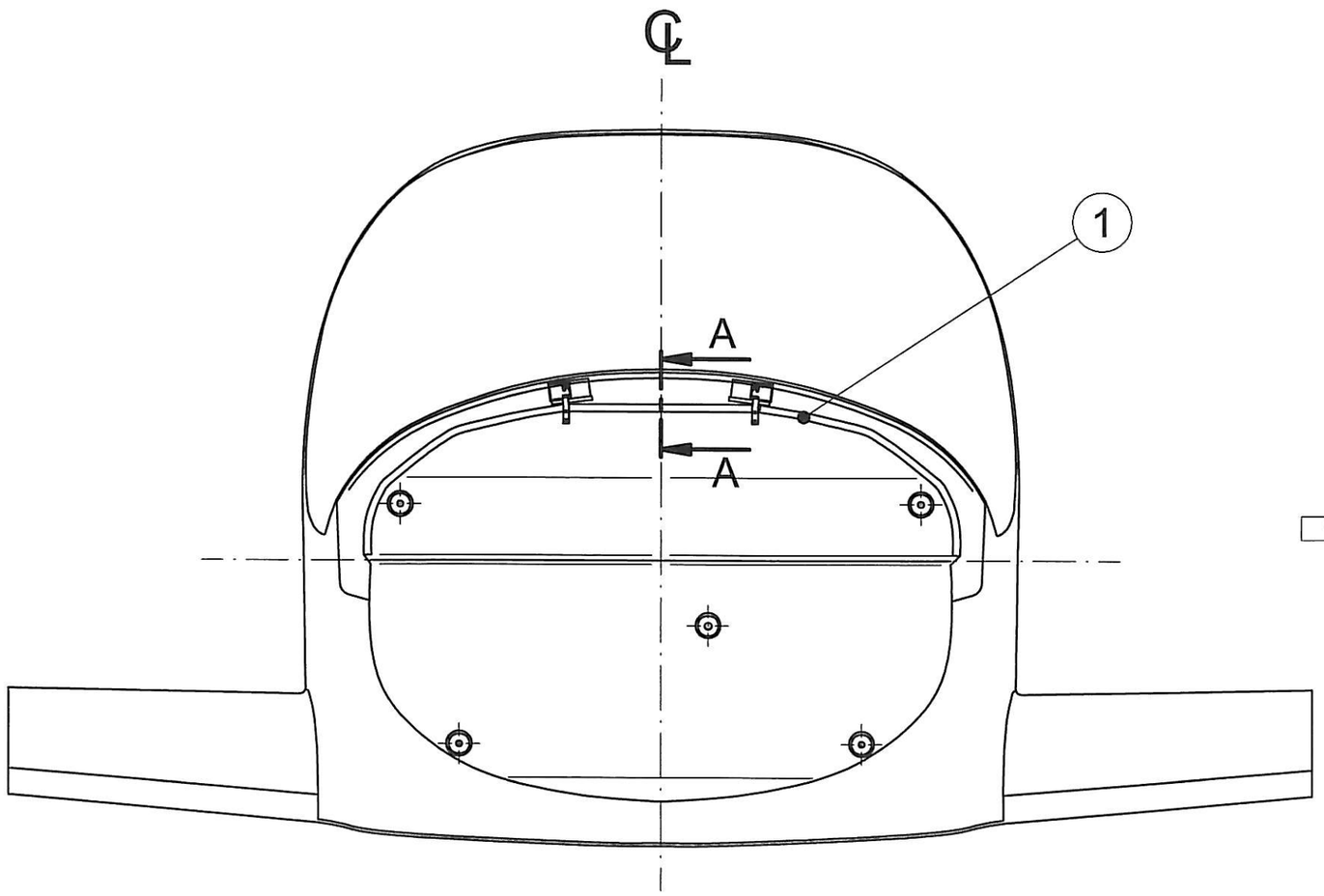

SACTION A-A
1:1

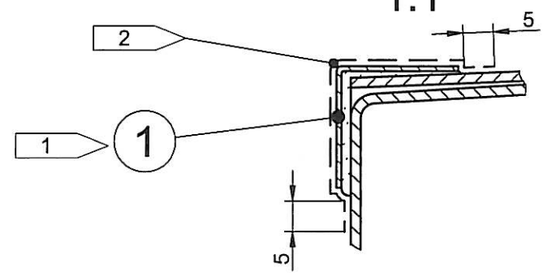

FLAG NOTES

1 — PASTE UP WITH TEROSTAT 1K-PUR - FA. TEROSON

2 — PROTECT SURFACE WITH FIRE PROTECTION PAINT ACCORDING TO DPS 14 CHAPTER 1

ITEM	QTY	PART NUMBER	DESCRIPTION	MATERIAL TYPE	H.T.	MATERIAL SIZE	SPECIFICATION	REMARK
1	1	DA4-5310-11-00	SEAL COVER					

DIMENSIONS **METRIC**

FIRST ANGLE PROJECTION — FORMAT **A3**

UNLESS OTHERWISE SPECIFIED DIMENSIONS ARE IN MM

DIMENSION TOLERANCES

2 DECIMAL	±0,25
1DECIMAL	±0,5
DECIMAL	±1
ANGLE	±1°
RAD	±0,5

3.2 FINISH IN MICRO-METER

IDENTIFICATION MARKINGS **DE-S-10-00003** - -

CLASSIFICATION: **NONE**

INTERCHANGEABLE PART **NO**

THIS DRAWING WAS PRODUCED USING SOFTWARE: **SOLID EDGE V18**

FILENAME **DA4-5310-10-00.dft**

Diamond Aircraft Industries GmbH — Diamond Aircraft Industries — N. A. Otto-Straße 5, A-2700 Wiener Neustadt

DEPARTMENT		SIGN	DATE
DRAWN	**M. Scheikl**		**20.04.09**
CHECKED:	**B. Jäger**		05.05.09
QA:	**N/A**		
STRESS:	**N/A**		
MANUF.:	**N/A**		
SYSTEM:	**N/A**		
APPROVED:	**C. Jütte**		5. Mai 09

PROJECT **DA 40**

TITLE **SEAL COVER - INSTALLATION**

DWG.ORIG. **DAIA** — DWG.NO. **DA4-5310-10-00** — REV "-"

CODE **710197** — SCALE 1:10 — SH **01** OF **01**

ALL RIGHTS RESERVED FOR THIS DOCUMENT WHICH MAY NOT BE REPRODUCED OR DISCLOSED TO THIRD PARTIES WITHOUT THE PRIOR WRITTEN CONSENT OF DIAMOND AIRCRAFT INDUSTRIES

Confidential