SERVICE BULLETIN

Diamond AIRCRAFT

Service Bulletin No.: DAC1-34-02 Rev. 2 **Date Issued: 28 January 2013**

Title: Installation of backup Artificial Horizon Indicator

1. ATA Code: 3420

2. Effectivity: All DA20-C1 Aircraft equipped with the Garmin G500 system.

3. General: This Service Bulletin (SB) provides the installation instructions for installing a backup artificial horizon indicator.

4. Compliance: Compliance with this SB is mandatory for night VFR operation in European Aviation Safety Agency (EASA) member countries (see SB DAC1-92-07) when the Garmin G500 System is installed. Otherwise, it is Optional.

NOTE: For aircraft S/N C0001 to S/N C0586 DA20-C1 SB DAC1-92-08 Rev. 0 (or later) must be installed prior to installing this SB.

5. Approval: Engineering data referenced or contained in this SB is approved as part of the type design.

6. Labour: Approximately 3.0 hours will be required to accomplish this SB.

This estimate is for direct labour performed by a technician and it does not include setup, planning, familiarization, cure time, part fabrication or tool acquisition.

7. Material:

Part Number	Description	Qty
4200-10	Artificial Horizon, 7º panel tilt	1
MS35214-31	Screw, Machine, Phillips	3
22-3424-01-00	Harness, Backup Artificial Horizon	1
MS3320-2	Circuit breaker, 2A	1
MS3367-4-9	Cable ties	15
22-3424-81-00	Support Bracket, Backup Indicator	1
22-3424-82-00	Support Rail, Backup Indicator	2
MS20426AD3-5	Rivet	4
MS24693C27	Screw	2
NAS1149DN616H	Washer	2
MS21044N06	Locknut	2

Non-EASA member countries will also require:

Part Number	Description	Qty
22-1131-00-08	Placard, Circuit Breaker, AH	1

Material for non-EASA member countries can be ordered as kit: DAC1-34-02AMK0.

EASA member countries will also require:

Part Number	Description	Qty
22-1131-00-07	Placard, Circuit Breaker, AH, EASA	1

Material for EASA member countries can be ordered as kit: DAC1-34-02AML0.

NOTE: Backup Artificial Horizon harness includes the following:

Part Number	Description	Qty
	Jumper Cable	1
3-350820-2	Faston	1

NOTE: If the TAS600 traffic system is installed, the following items must also be ordered:

Part Number	Description	Qty
22-3412-80-00	Support Bracket, Radio, TAS600	1
210080	Tubing, Blue	560 mm
MS24693C27	Screw	2
NAS1149DN616H	Washer	2
MS21044N06	Locknut	1

Material for aircraft with a TAS600 traffic system can be ordered as kit: DAC1-34-02AMM1.

8. Special Tools: 0.060” 6-Spline wrench

9. References: DA20-C1 Aircraft Maintenance Manual, Document # DA201-C1

10. Accomplishment Instructions

10.1 Disconnect the aircraft battery. Refer to AMM # DA201-C1, Chapter 24-31.

10.2 Remove the instrument panel cover. Refer to AMM # DA201-C1, Chapter 25-10.

10.3 Pull the battery circuit breaker located on the right side of the instrument panel.

10.4 Remove the auxiliary plug outlet and the hourmeter located on the right hand side of the instrument panel.

10.5 Remove the Limitations placard and Circuit Breaker placard and clean the placard areas with isopropyl alcohol. Refer to Figure 1.

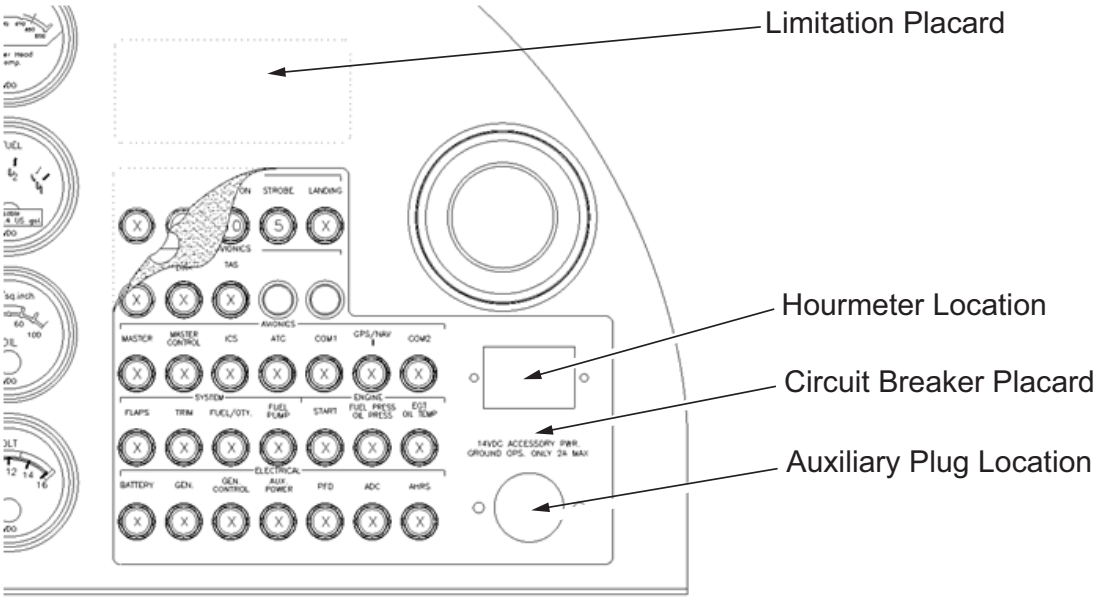

Figure 1

10.6 If TAS 600 is installed carry out steps 10.6.1 through 10.6.9. If TAS 600 is not installed, continue to step 10.7.

NOTE: The Encoder unit is only installed with the TAS 600 installation.

10.6.1 Remove the encoder from the instrument panel and plug the outboard hole with supplied hardware. Refer to Figure 2.

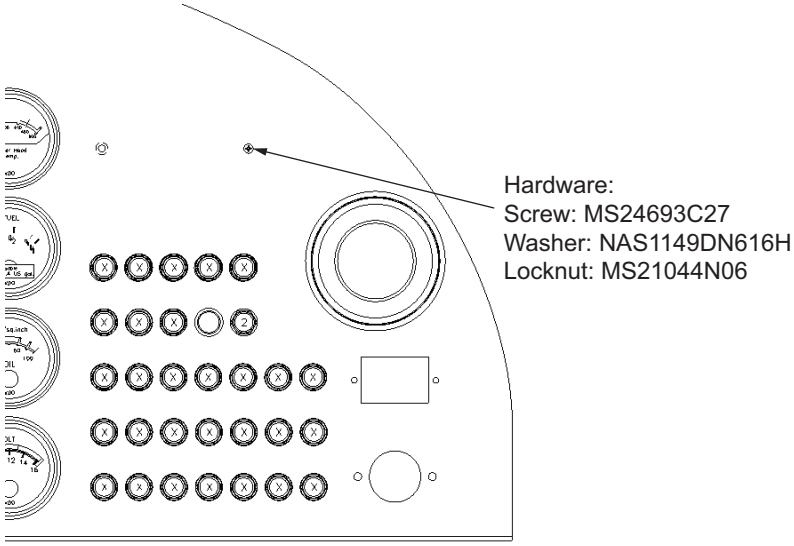

Figure 2

10.6.2 Install the encoder to the new support bracket (P/N 22-3412-80-00) using existing encoder mounting hardware. Refer to Figure 3.

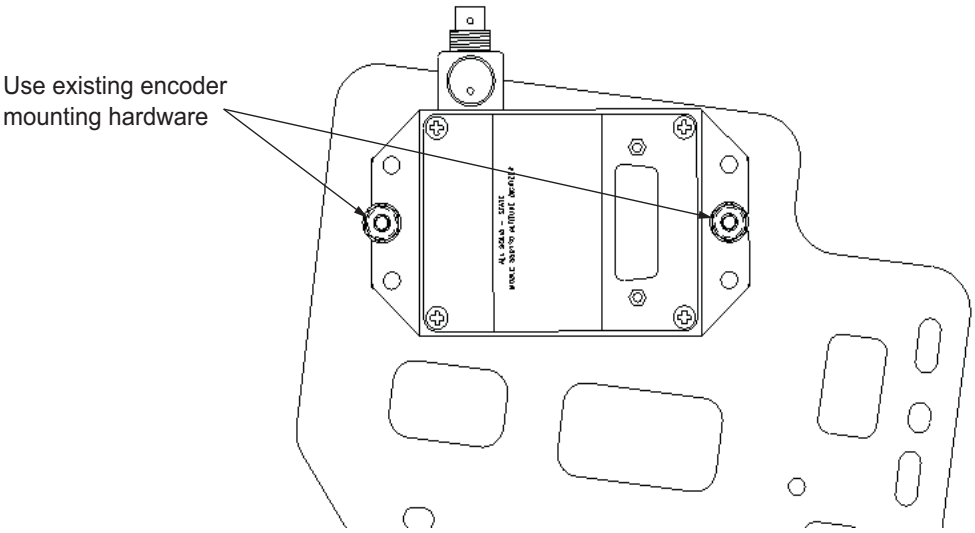

Figure 3

10.6.3 Remove radios from the radio rack and replace the existing right hand (co-pilot) radio support bracket with a new encoder support bracket.

NOTE: Use the existing hardware and clamp.

NOTE: Remove the surface protection around each support bracket hole used to mount the radios. Clean with alcohol and assemble immediately. Protect with Nycote 7-11 or equivalent.

10.6.4 Remove the elbow fitting from between the altimeter and mating quick-connect fitting and install mating quick-connect fitting directly into altimeter.

10.6.5 Remove the quick-connect fitting from the encoder and install the removed elbow fitting (P/N SE18) into the encoder and install the encoder quick connect fitting into the elbow fitting, as shown in Figure 4.

10.6.6 Apply RTV732 silicone (or equivalent) between the support bracket and radio rack. Refer to Figure 4.

NOTE: RTV732 silicone is not provided. Source locally.

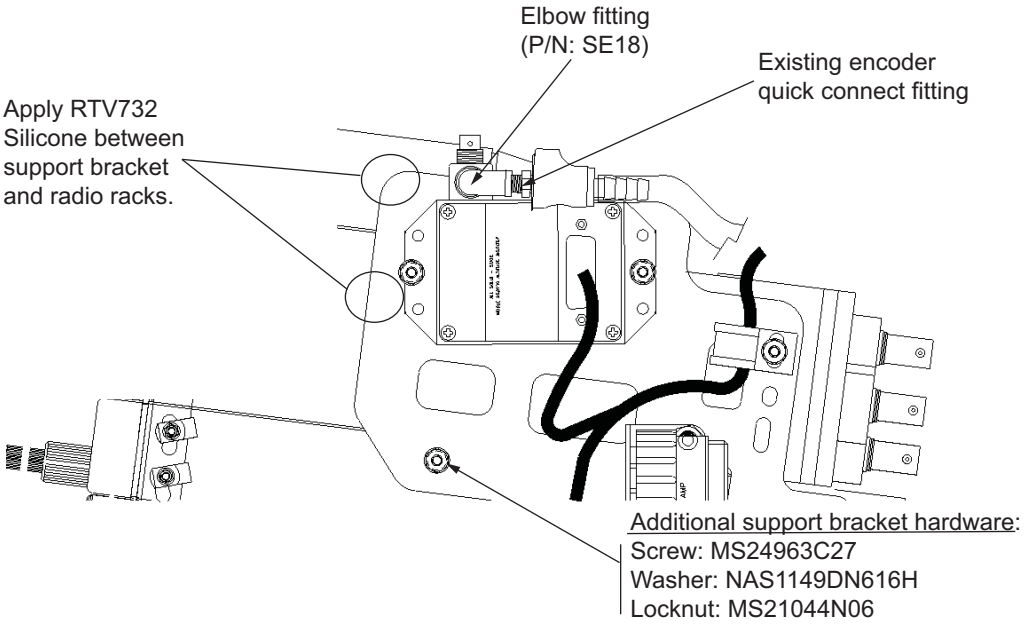

Figure 4

10.6.7 Install the additional support bracket hardware as shown in Figure 4.

10.6.8 Replace the four static hose pieces with the supplied hose (P/N 210080) as shown. Ensure there are no low points in the static line. Refer to Figure 5.

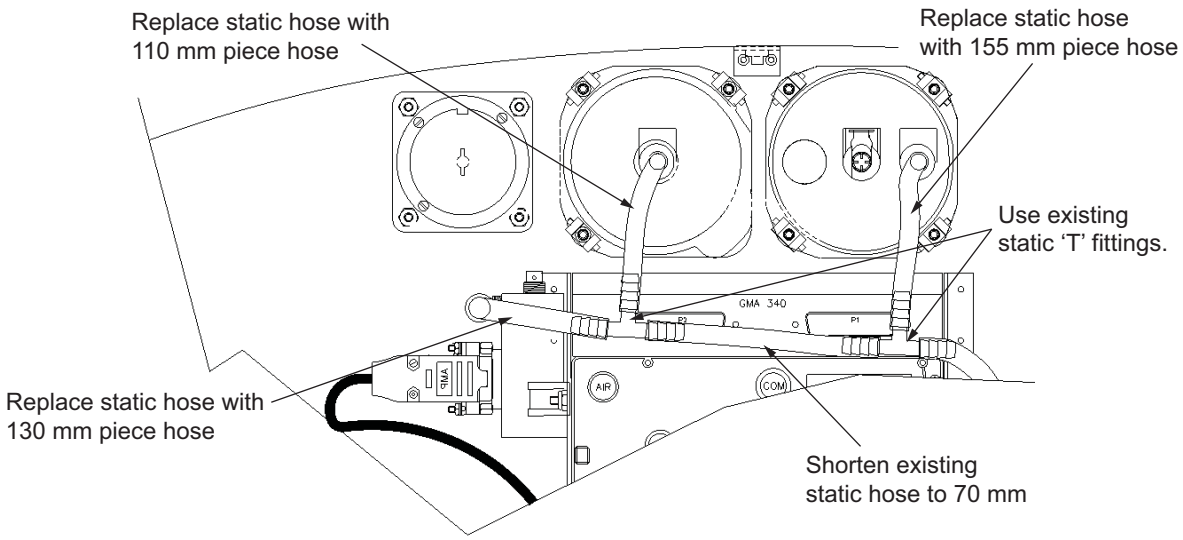

Figure 5

10.6.9 Secure hoses to the existing wire harness. Refer to Figure 6.

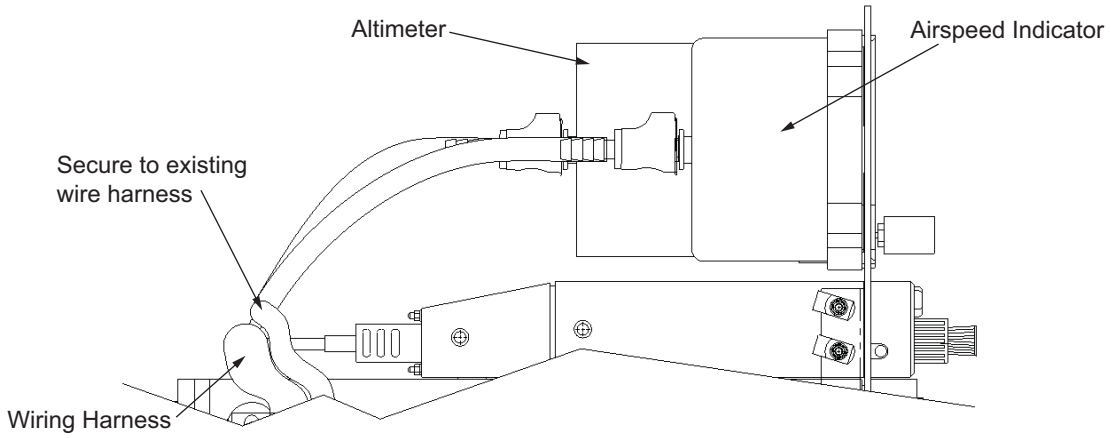

Figure 6

10.7 Use the Template provided in this SB to locate and drill holes for the artificial horizon and a support rail (2.4mm). Refer to Figure 7.

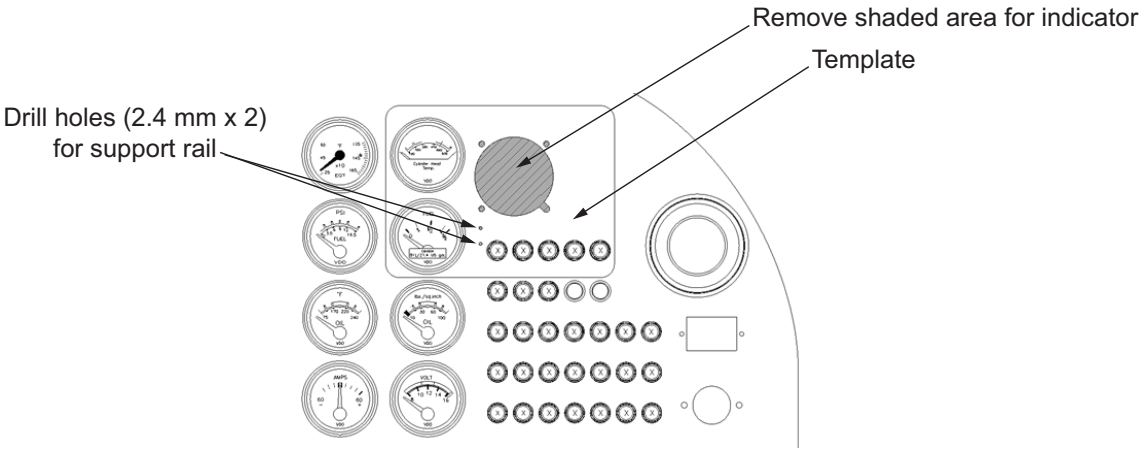

Figure 7

10.8 Countersink each support rail hole with a 4.2 mm diameter, 100º angle, countersink on the face of the instrument panel.

NOTE: Make sure not to scratch the instrument panel.

10.9 Drill two 2.4 mm diameter holes on the instrument panel bottom shelf. Refer to Figure 8.

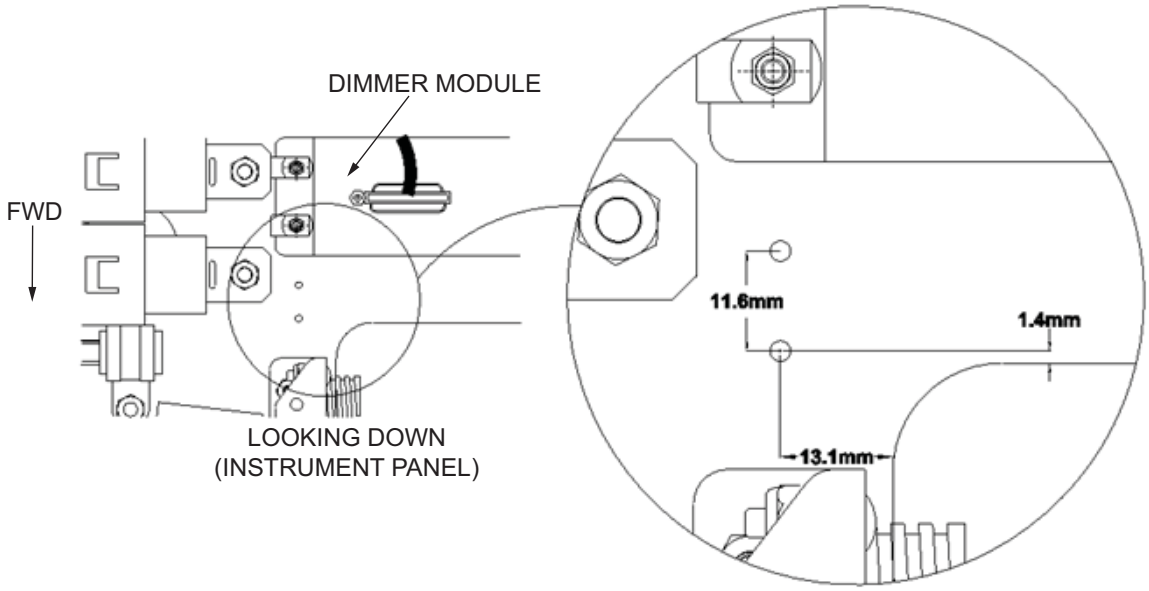

Figure 8

10.10 Countersink each support rail hole with a 4.2 mm diameter, 100º angle, countersink from the bottom of the instrument panel.

NOTE: Make sure not to scratch instrument panel.

10.11 Apply Nycote 7-11, or equivalent, surface protection to all cut edges.

10.12 Rivet the support rails (P/N 22-3424-82-00) as shown in Figure 9 using supplied rivets (P/N MS20426AD3-5).

NOTE: Observe orientation of support rail as shown in Figure 9 when installing.

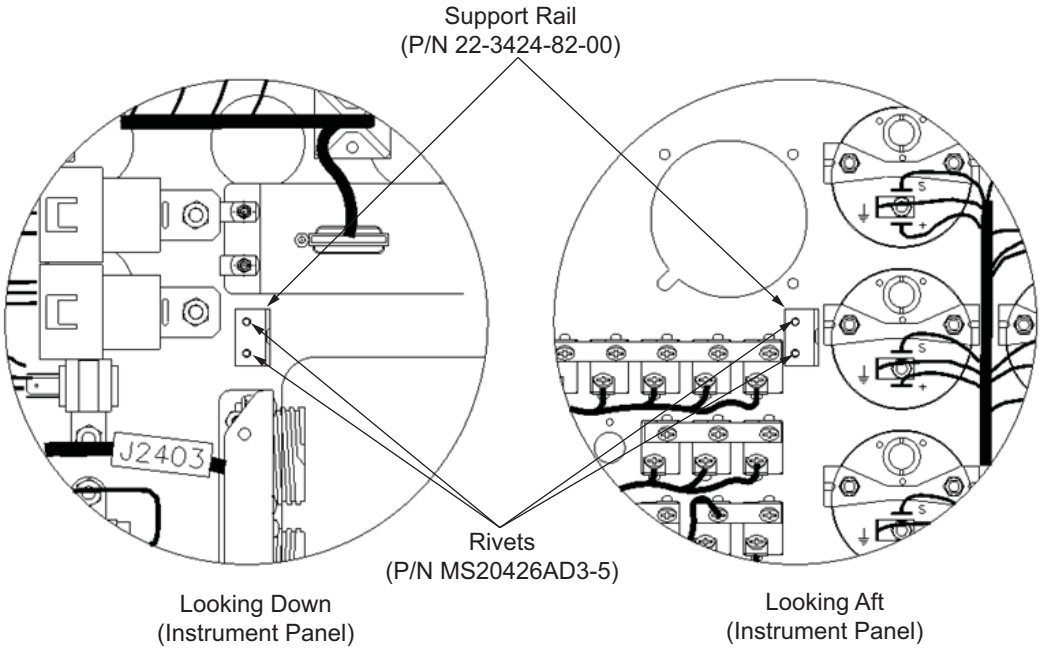

Figure 9

10.13 Prior to installing the Artificial Horizon, set the voltage control lighting switch to 14V. Refer to Figure 10.

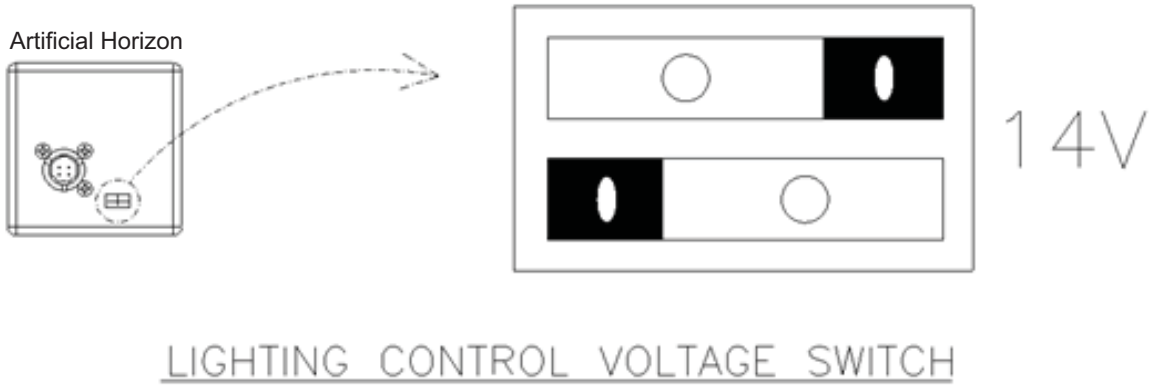

Figure 10

10.14 Mount the Artificial Horizon Indicator (P/N 4200-10) into the new hole cutout in the instrument panel using the supplied screws (P/N MS35214-31).

NOTE: Caging knob removal may be required during installation.
If so, 0.060” 6-Spline wrench is required.

10.15 Install 2A circuit breaker (P/N MS3320-2) into the location shown in Figure 11.

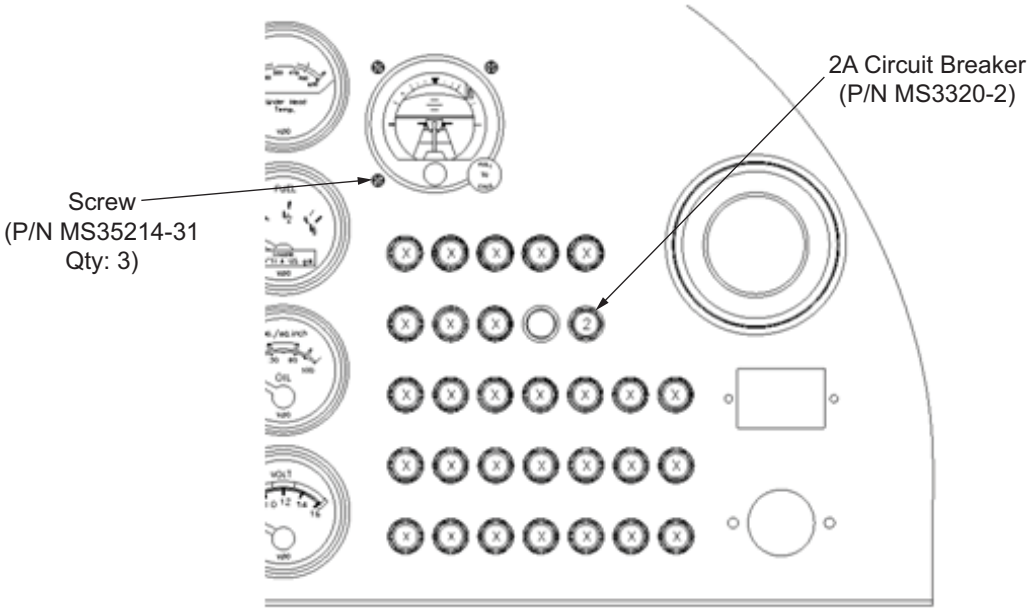

Figure 11

10.16 Install the new Circuit Breaker placard P/N 22-1131-00-07 for EASA or P/N 22-1131-00-08 for non-EASA member countries.

10.17 Install the hourmeter and the auxiliary plug outlet using existing hardware. Refer to Figure 12.

.

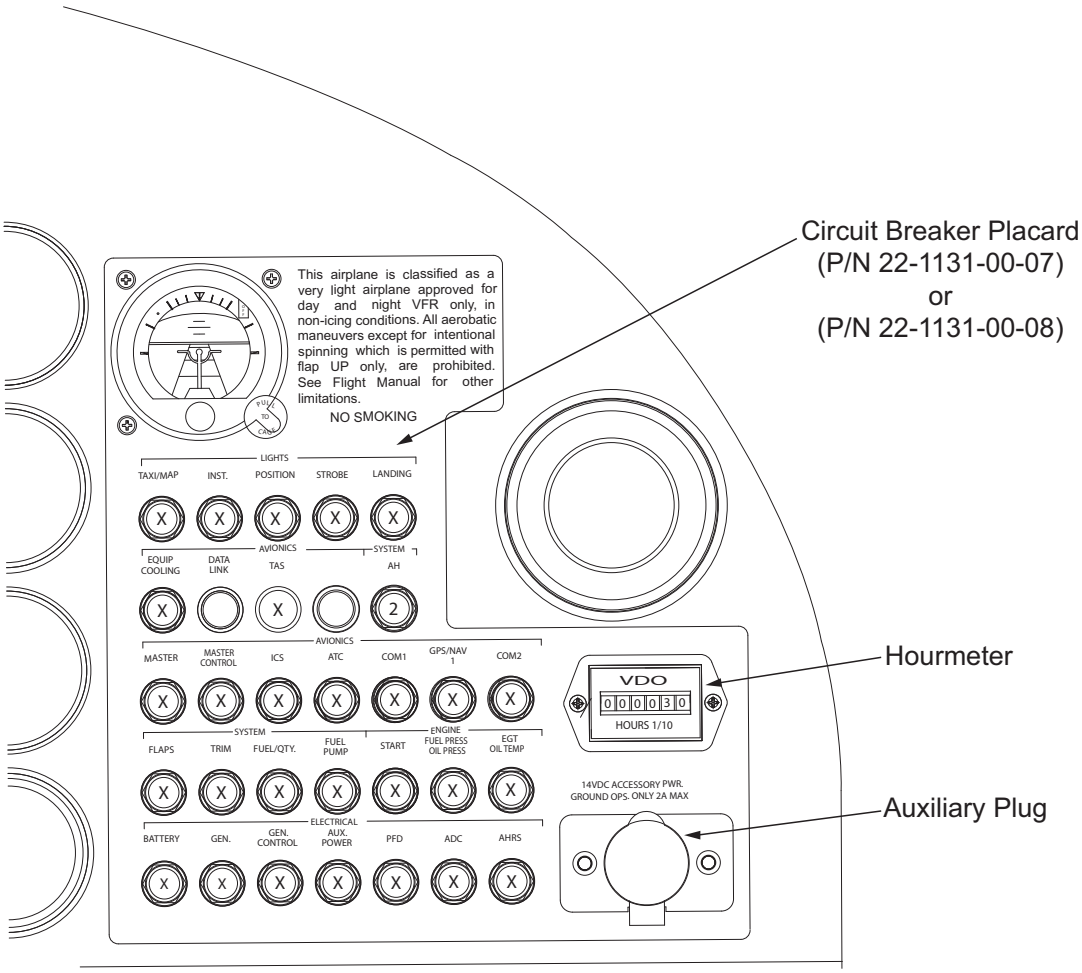

Figure 12

10.18 Install the support bracket (P/N 22-3424-81-00) using the screw (P/N MS24693C27), washer (P/N NAS1149DN616H) and the locknut (P/N MS21044N06). Refer to Figure 13.

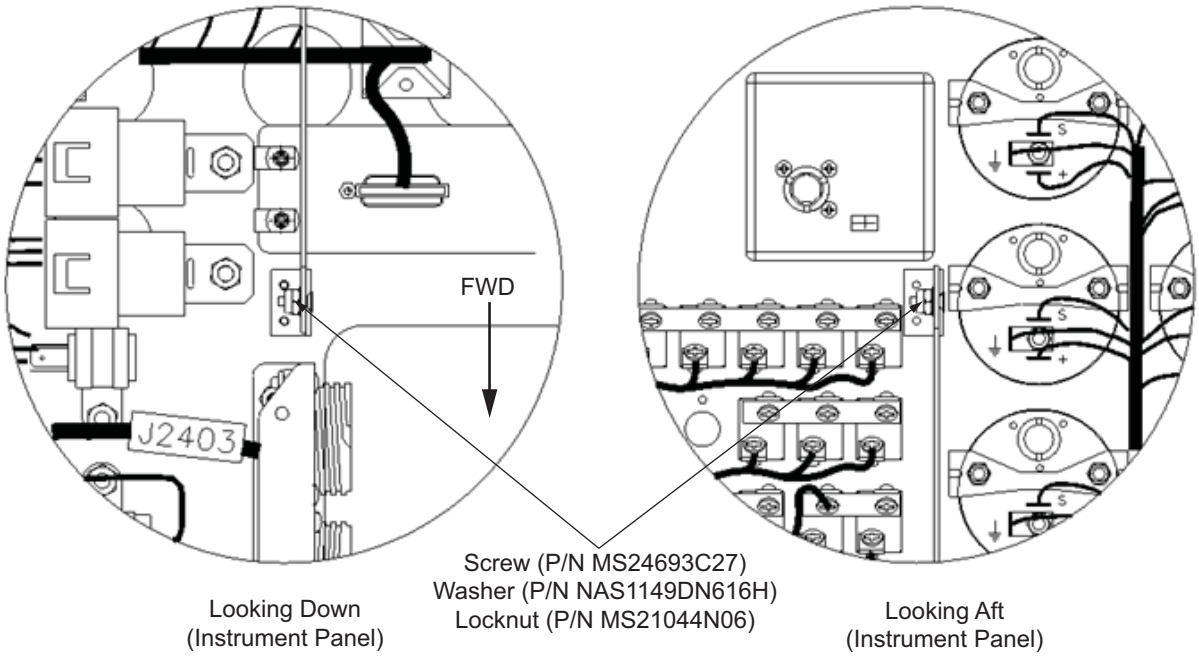

Figure 13

10.19 Install the Artificial Horizon harness (P/N 22-3424-01-00) and the supplied jumper cable. Refer to Figure 14 for details.

NOTE: The jumper cable is provided with the Artificial Horizon Harness.

INSTRUMENT PANEL LOOKING AFT

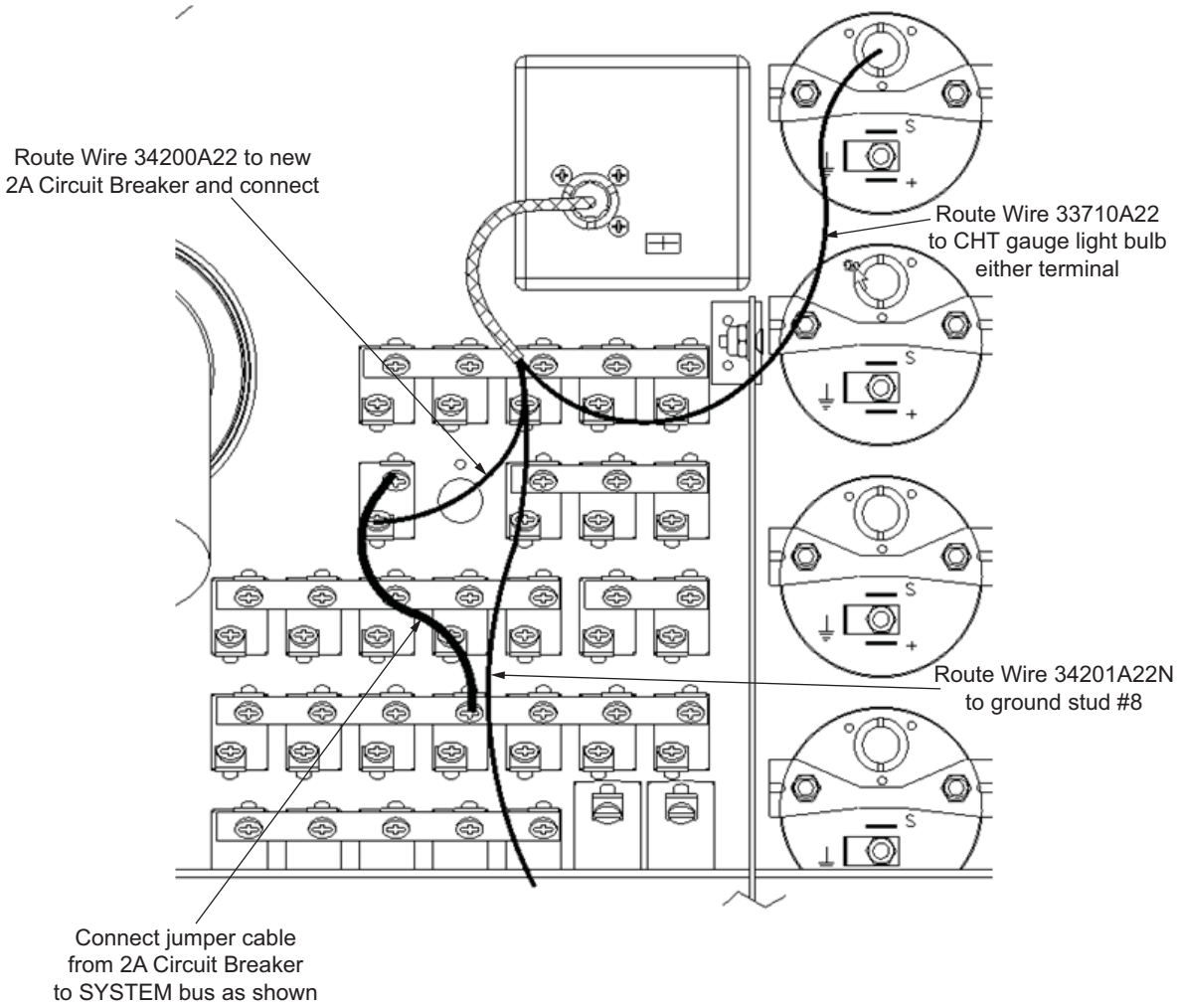

Figure 14

10.20 Cut off the existing faston contact from the Cylinder Head Temperature (CHT) gauge lighting wires (33706A22). Crimp 33710A22 wire with the existing CHT gauge lighting wires using the supplied faston contact. Refer to Figure 15.

NOTE: The wire code 33706A22 may be located on the other bulb terminal.

NOTE: Faston is supplied with the Artificial Horizon harness.

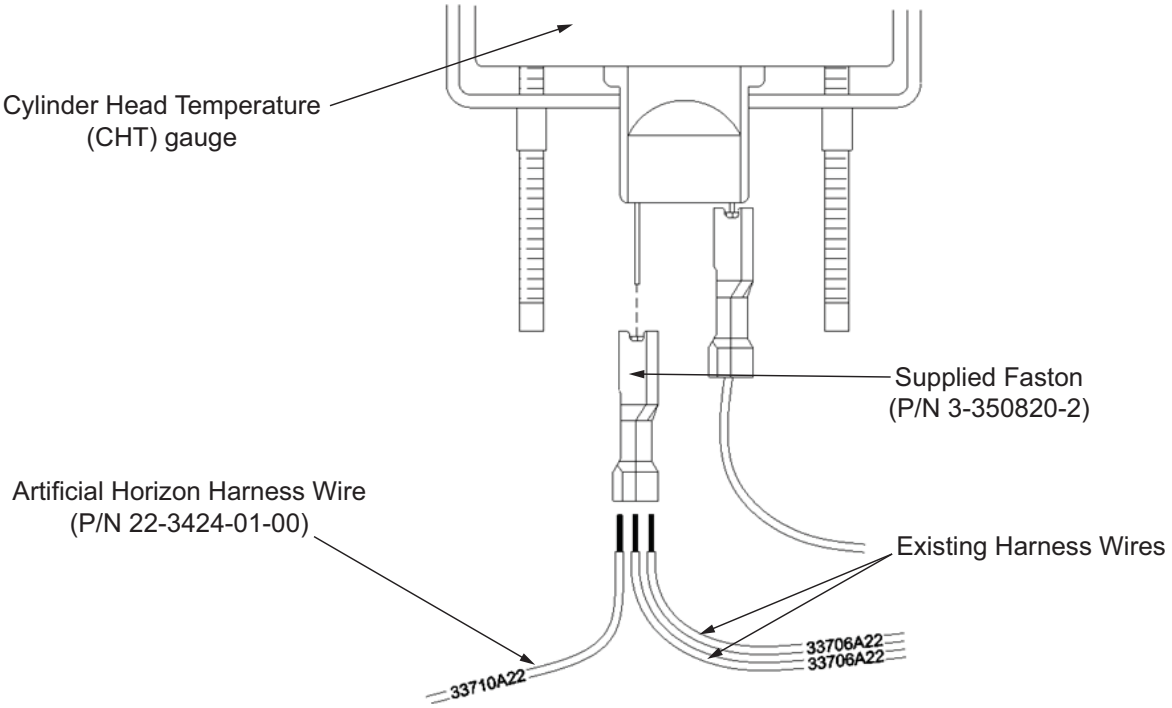

Figure 15

10.21 Connect the wire 34201A22N to ground stud #8 and secure with the supplied cable ties (P/N MS3367-4-9). Refer to Figure 16.

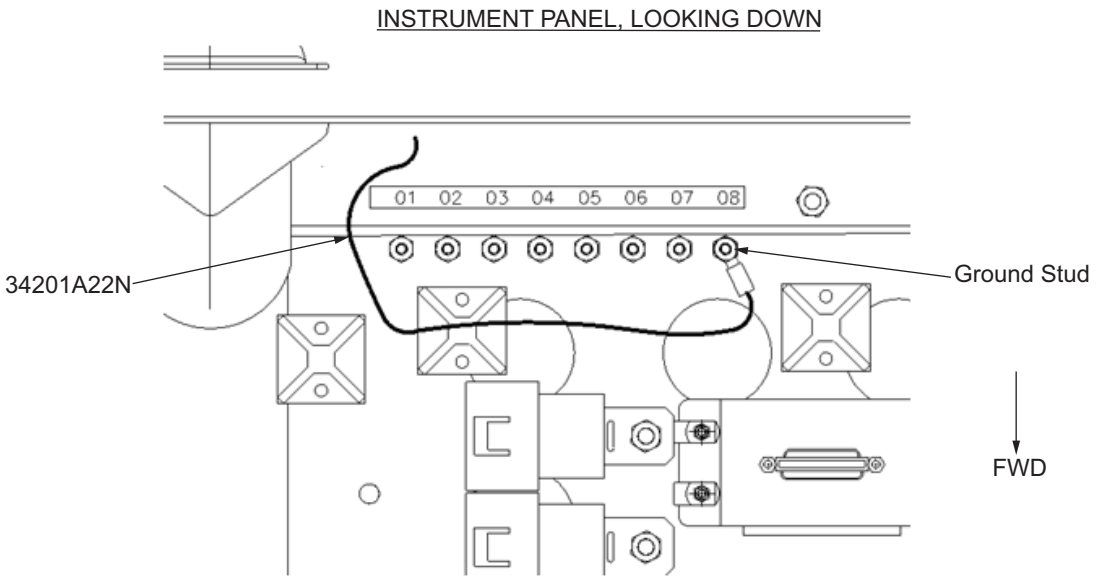

Figure 16

10.22 Secure the Artificial Horizon Harness to the existing instrument panel harness with the supplied cable ties (P/N MS3367-4-9).

10.23 Make sure that the area is clear of all unwanted materials and tools etc.

CAUTION: WHEN INSTALLING THE INSTRUMENT PANEL COVER, MAKE SURE NOT TO DAMAGE THE ARTIFICIAL HORIZON OR ARTIFICIAL HORIZON CONNECTOR/WIRING.

10.24 Install the instrument panel cover. Refer to AMM # DA201-C1, Chapter 25-10.

10.25 Connect the aircraft battery. Refer to AMM # DA201-C1, Chapter 24-31.

10.26 If the TAS600 system is installed, carry out a leak check on the static system.

10.27 Carry out the functional test of the Backup Artificial Horizon indicator.

10.27.1 Push in the battery circuit breaker, Artificial Horizon circuit breaker and turn the Electrical Master switch to ON.

10.27.2 Make sure that the Gyro Warning flag (red) is pulled out-of-view.

10.27.3 Make sure that the indicator internal lighting is working correctly. Turn the INSTRUMENT LT. knob ON and continue to adjust clockwise. Make sure that the Artificial Horizon's internal lighting turns on, and continues to get brighter.

10.27.4 Pull the cage knob and confirm the indicators display levels out.

10.27.5 Turn off power to the aircraft.

10.28 Incorporate Revision 26 or later TCCA Approved Revision into the AFM.

10.29 Make a log book entry that this SB DAC1-34-02, Rev 2 has been incorporated.

SCHEMATIC

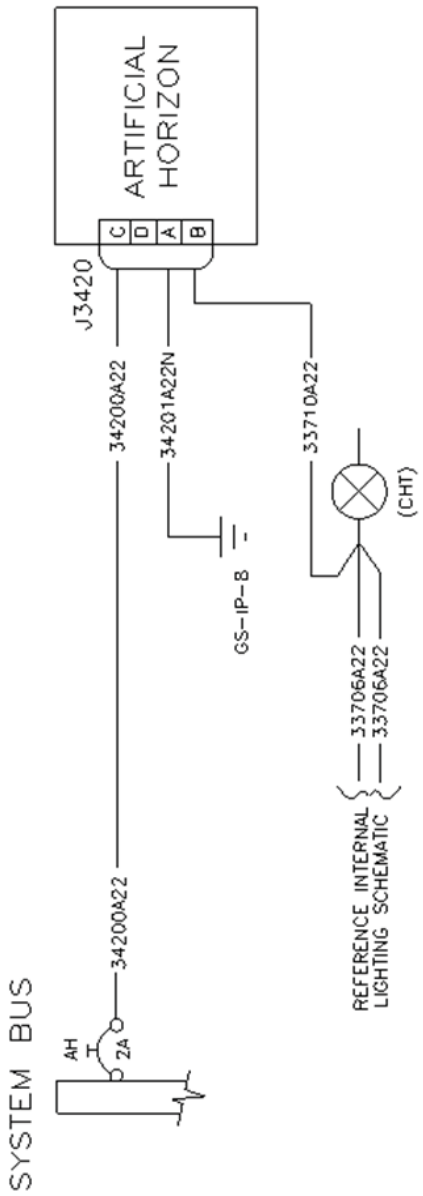

TEMPLATE

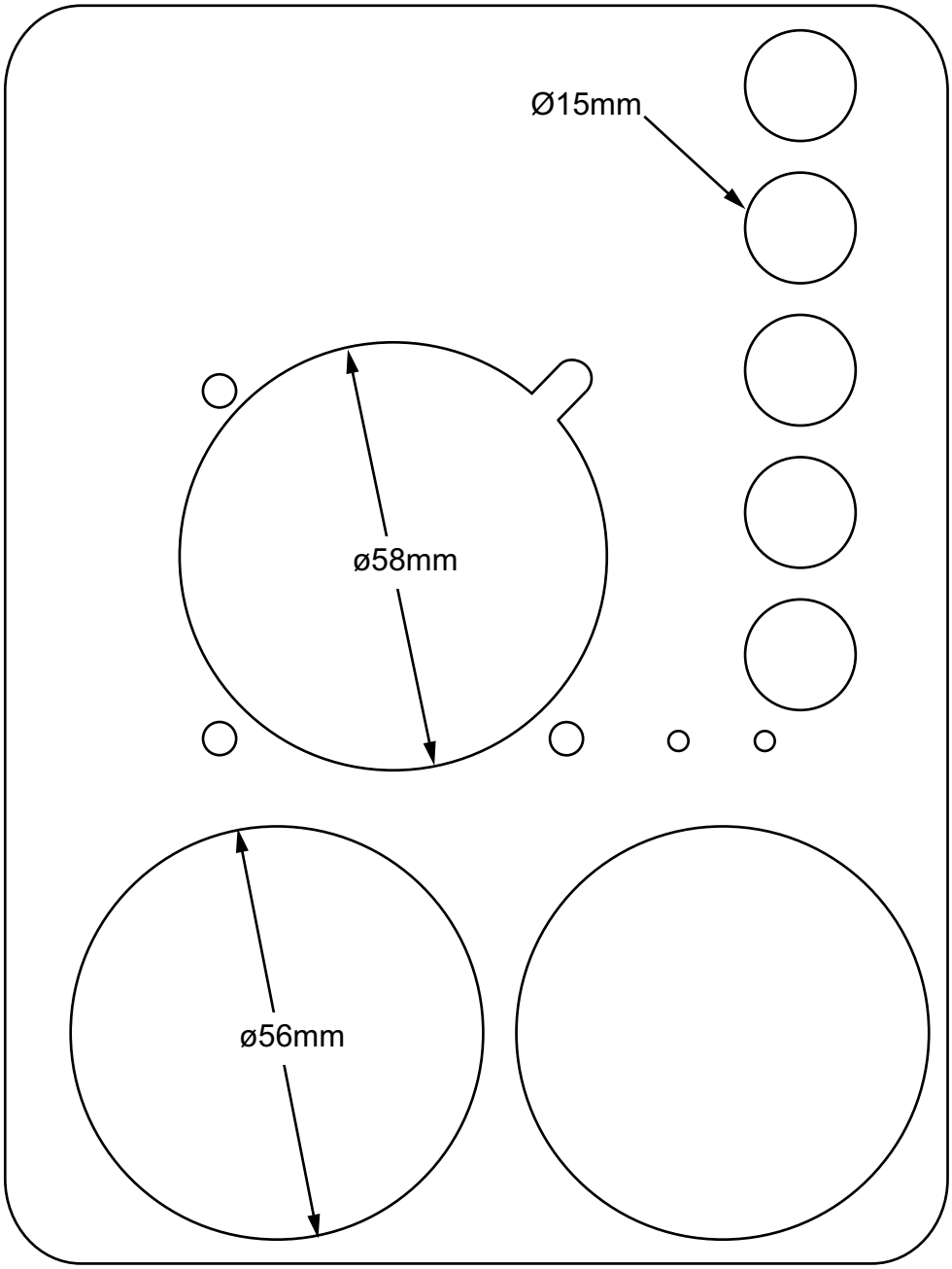

NOTE: Check dimensions prior to use. Printer driver may cause variation.

11. Weight and Balance: The weight and balance affected by this SB due to the installation of the 4200 Series Artificial Horizon and Harness is:

Item	Weight lbs (kg)	Arm in. (m)
4200 Series Artificial Horizon and Harness	+3.61 (+1.64)	-20.5 (-0.52)

12. Availability: Contact Diamond Aircraft Industries Inc.

13. Electrical Load Data: The electrical load data for the 4200 Series Artificial Horizon is:

Item	Current	Voltage
4200 Series Artificial Horizon	1.4A	14VDC

14. Credit: None.

Diamond Aircraft Industries Inc. 1560 Crumlin Sideroad, London, Ontario, Canada N5V 1S2

Customer Support: Phone: (519) 457-4041 Fax: (519) 457-4045 E-mail: custsupp@diamondair.com
Technical Publications: Phone: (519) 457-4030 Ext. 3173 E-mail: techpubs@diamondair.com